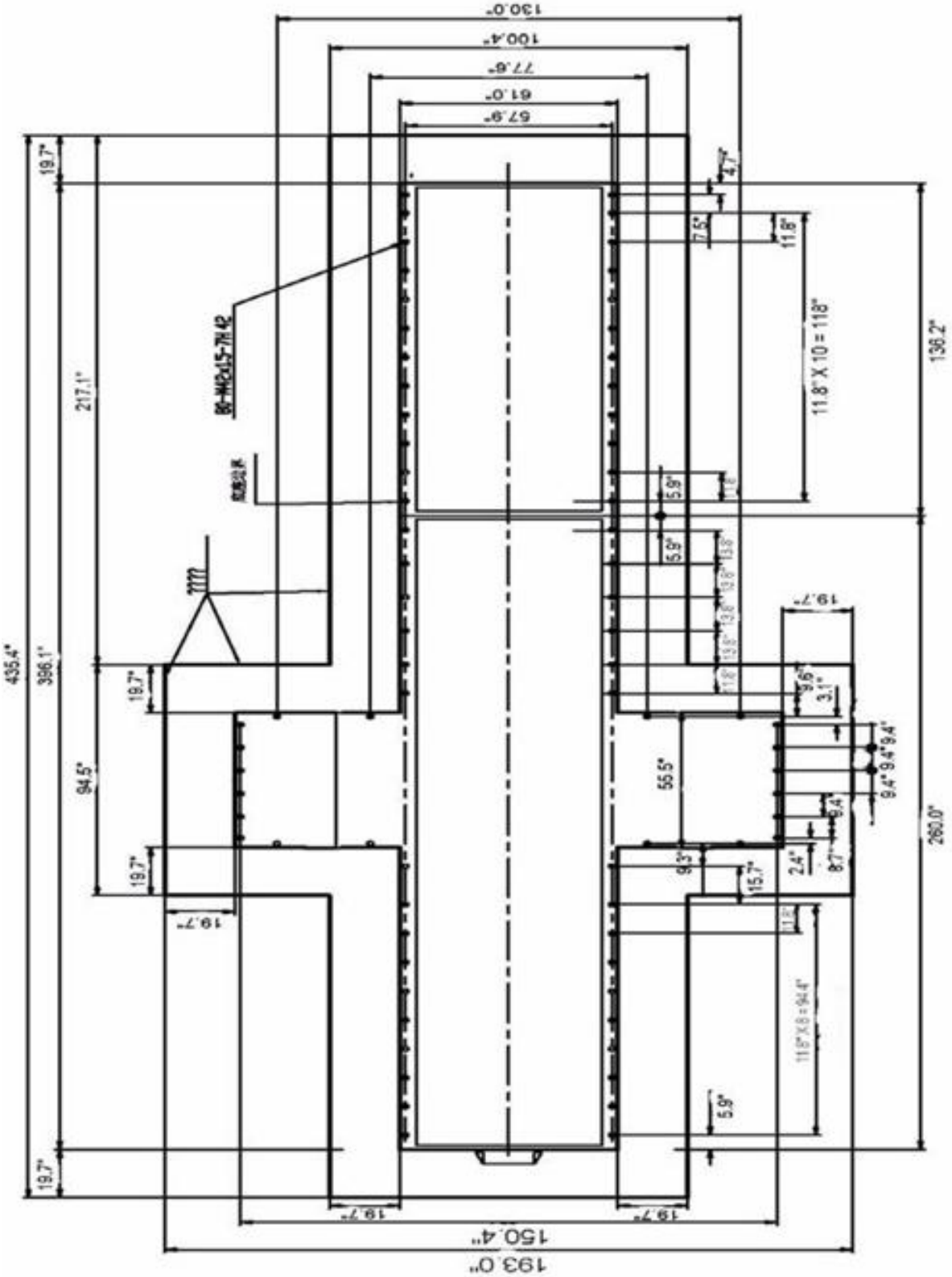
130.0"
100.4"
77.6"
61.0"
57.9"
19.7"
4.7"
7.5"
11.8"
11.8"X10=118"
136.2"
217.1"
435.4"
386.1"
94.5"
19.7"
55.5"
9.4"
9.4"
9.4"
260.0"
15.7"
2.4"
8.7"
5.9"
19.7"
150.4"
193.0"

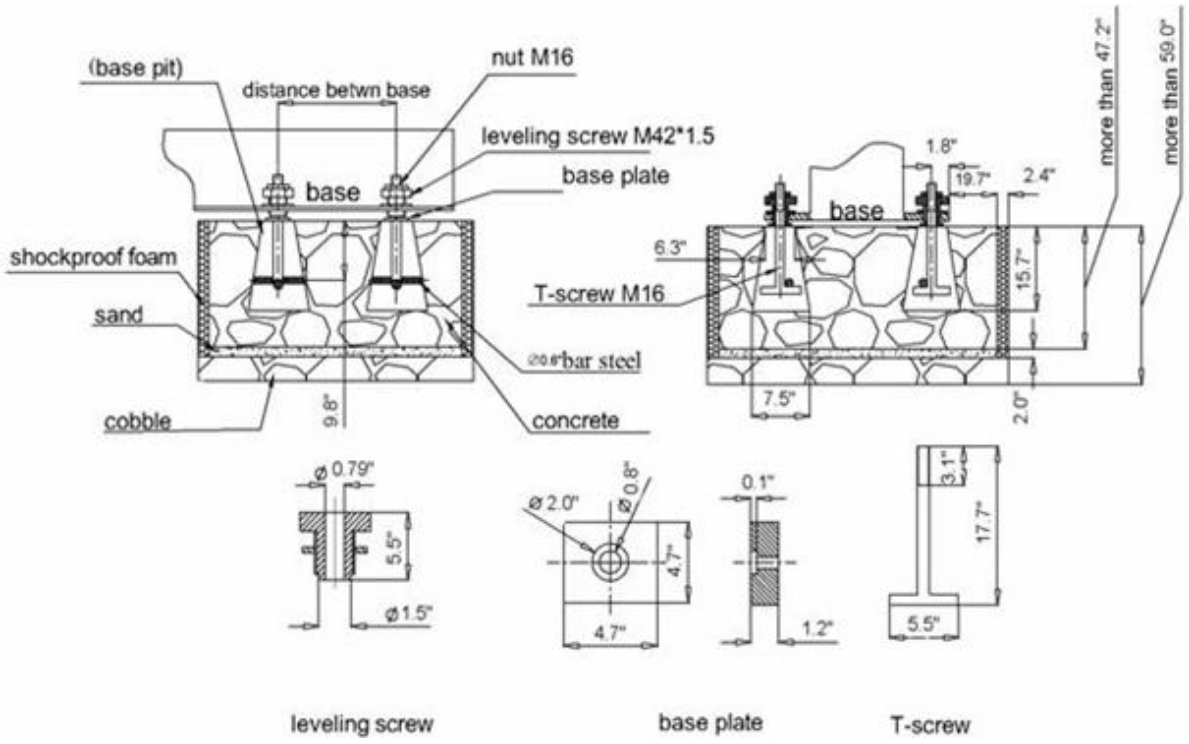

leveling screw | base plate | T-screw